IQ8 Detectors without integrated alarm device

Technical data

Type	TM	TD	O	O^2T	OTG	OTblue
Part No.	802171	802271	802371	802374	802473	802375
Operating voltage	8–42V DC	8–42V DC	8–42V DC	8–42V DC	8–42V DC	9–42V DC
Quiescent current at UN approx.	40µA	40µA	50µA	60µA	65µA	50µA
Application temperature	−20°C–+50°C	−20°C–+50°C	−20°C–+72°C	−20°C–+65°C	−20°C–+50°C	−20°C–+50°C
Response temperature (1°C/min.)	+54°C–+65°C	+54°C–+65°C	–	+79°C–+88°C	+54°C–+65°C	+54°C–+65°C

General technical data

Alarm current w/o communication	approx. 18mA
Storage temperature	−25°C to +75°C
Humidity (no condensation)	0 – 95%
Ingress protection	IP42
Material/colour	ABS, white similar to RAL 9010
Weight	approx. 110g
Origin	Germany

IQ8 Detectors with integrated alarm device

Technical data

Type	O^2T/F	O^2T/So	O^2T/FSp	
Part No.	802383	802384	802385	
Operating voltage	8–42V DC	30–42V DC	30–42V DC	
Quiescent current at UN approx.	75µA	80µA	90µA	
Load factor	1,2	2,2	3	
Sound level	–	92dB(A) +/– 2dB	92dB(A) +/– 2dB	

General technical data

Alarm current w/o communication(conv. mode)	approx. 18mA
Storage temperature	−25°C to +75°C
Operating temperature	−20°C to +50–65°C
Response temperature (1°C/min)	79°C to 88°C
Humidity (no condensation)	0 – 95%
Ingress protection	IP42 (with base)
Material/colour	ABS, white similar to RAL 9010
Weight	approx. 145g
Origin	Germany

IQ8 Detector without integrated alarm device

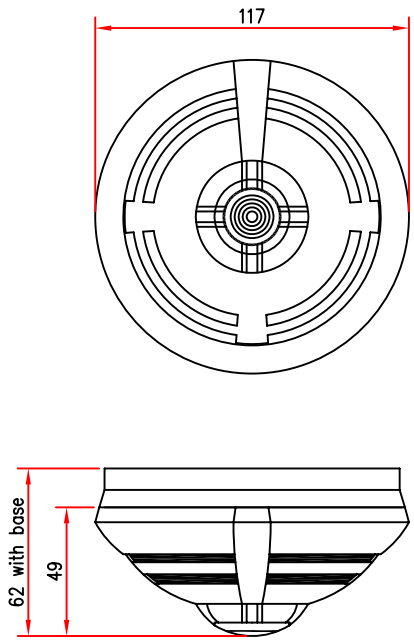

IQ8 Detector with integrated alarm device

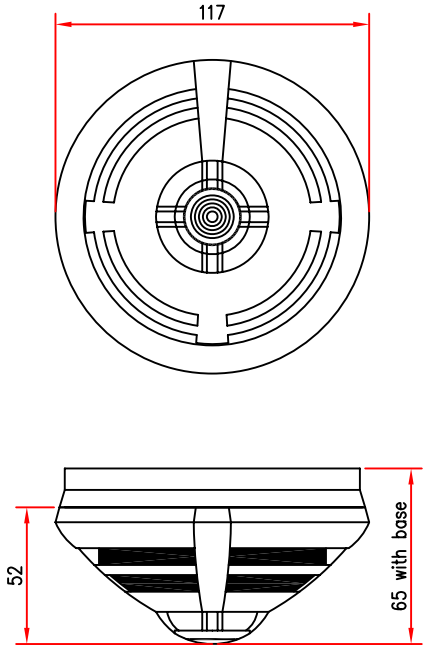

Sym.	Ant./Qty.	Forandring/Alteration	Date/Sign.

Dato/Date	Konstr./Design	Kontroll/Controlled	Målestokk/Scale
2005–07–01			1 : 2
Arkiv/Archive ifs	Tegnet/Draw tem	Godkjent/Approved	

Eltek Fire & Safety

Copyright © Eltek Fire & Safety. All Rights Reserved

General Production Drawing
IQ8 Detectors

Erst. for/Replace for | Erst. av/Replaced by

T39942–N3

Henvisning/Reference | Ordre nr./Order no. | Konsulent/Consultant